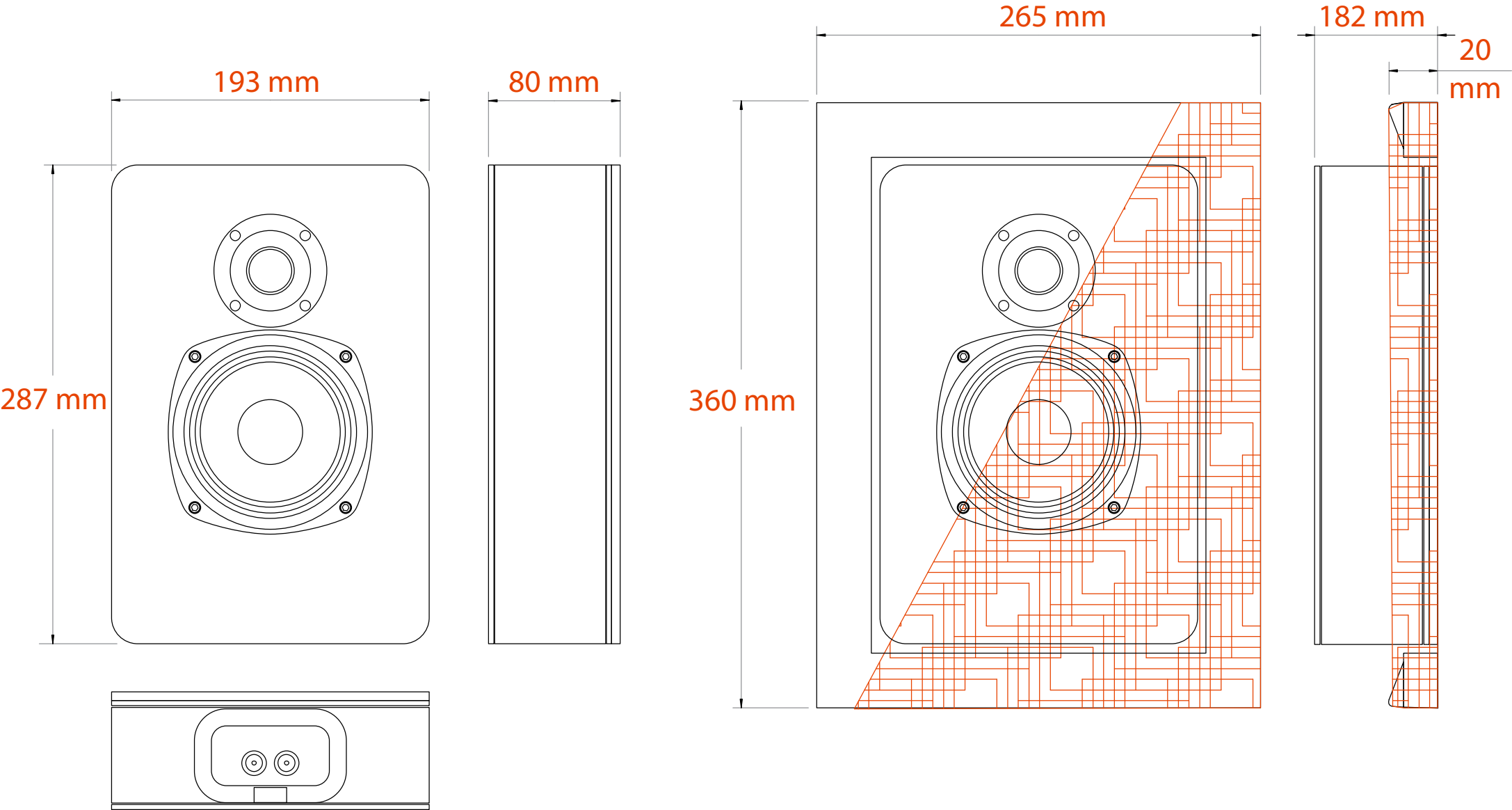
193 mm
80 mm
287 mm
265 mm
182 mm
20 mm
360 mm